ISSUE
116
All About Optics

Lathrop NEWS

this issue

If you have product development challenges...

We have the solutions.

Product Expertise

Life Science Instrumentation
Medical Device and Diagnostic Instruments
Production Automation
Optics and Imaging
Consumables / Disposables
Lab on a Chip
Fluidics

Lathrop has a seasoned staff of designers and engineers in the fields of:

- Project Management
- Mechanical Engineering
- Systems Engineering
- Electronics Design
- Optics Engineering & Design
- Industrial Design & Human Factors
- Software & Firmware Development

ISO 9001 CERTIFIED

All About Optics at Lathrop

Article By Randy Marks and Jackie Richards

Lathrop Engineering's dedicated, on-site optical lab lets us provide you with rapid, robust breadboard development and designs that translate into reliable prototype and production instruments. Our finely-tuned, state-of-the art optics R&D pipeline bridges back-of-the-envelope calculations to full production solutions. The broad experience of the engineers on our multidisciplinary optics team ranges anywhere from multi-wavelength flow cytometry to fluorescence imaging to high and low power digital microscopy.

NEW AND NOTABLE PROJECT: AXISYMMETRIC CELL SORTING

Recently, one of our more interesting and unique projects was to design and build an optical detection system, Microbix'® LumiSort™ device. It purifies X- or Y-chromosome bearing sperm cells from the mixed population in semen which allows for in vitro fertilization (IVF) and livestock reproduction using only sperm cells of the desired sex (X for female or Y for male offspring). This required a flow cytometer design with multiple illumination axis, where the detection optical axis is coaxial with the flow path. Initial design and testing with fluorescent polystyrene beads resulted in Coefficients of Variation (CVs) of 0.6%, which is better than any similar cytometric system we've seen before, even with a vendor bead CV specification of 0.7-0.8%. We don't actually know what the actual CV of this system is because we couldn't find a target produced with enough precision to measure it!

For live sperm cell detection, a fluorescent DNA stain was used. Cells with an X chromosome contain approximately 4% more DNA than those with a Y chromosome and therefore emit a stronger fluorescence signal, allowing discrete detection of each cell type at the single-cell level. However, because the cells are elongated, have a long tail, and are quite flat at the head, fluorescent signal with traditional flow cytometry is highly dependent on the orientation of the cells. Hydrodynamic focusing of the sperm

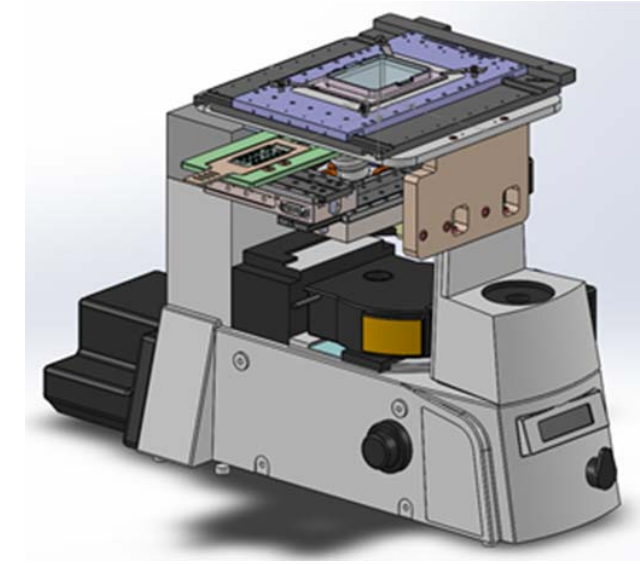

Custom Imaging Systems

RECENT PROJECTS

- Scanning tissue pathology microscope
- Multi-channel fluorescence microscope for sub-micron target detection
- Custom lens and illuminator design and development
- Fluorescence imager in portable PCR analysis device
- Microtiter plate fluorescence reader used in 5-channel, real-time PCR analysis of each well
- LED illuminators for fluorescence detection
- Portable lab-on-a-chip immunoassay reader
- High-speed, high-magnification scanning imaging systems for custom lab-on-a-chip fluorescent nanosphere detection
- Machine vision optical design for improved precision and reliability
- Custom image quality simulation and analysis software for cost-conscious design while maintaining reliability and performance
- State-of-the-art flow cytometer for sperm cell sorting

cells causes them to orient with their tails along the flow axis, effectively creating one orientation variable about the long axis. To counter the flat profile, we developed a detection system that is coaxial to the flow axis, making it agnostic to the cell orientation. We also developed a similar orientation-agnostic approach to the delivery of excitation light. This excitation and detection system separated two sperm cell populations substantially better than the industry standard.

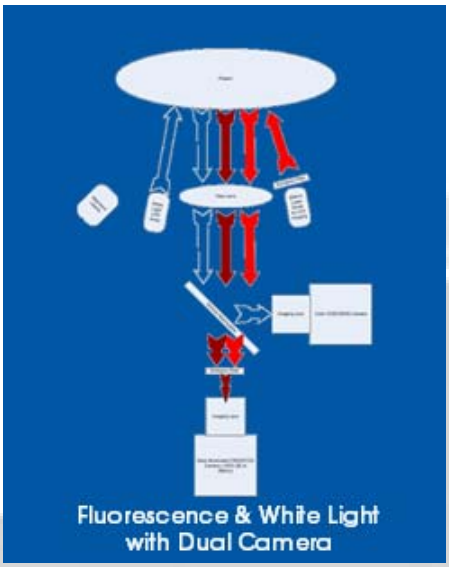

To sort populations of wanted and unwanted cells, we developed a laser-based, destructive sorting method operating at 20-100K kills per second. This method not only allows for single-cell discrimination which is more precise than industry standard approaches, it also eliminates the need for droplet-based sorting methods which have been shown to reduce the fertility of desired cells.

NEW IN THE OPTICS LAB: CUSTOM IMAGE SIMULATION TOOL TO ANALYZE NON-STANDARD METRICS

We've recently developed a custom diffraction-based image simulation tool which allows Lathrop to provide much better optical quality analysis for our clients throughout the development process. It utilizes modern GPU computing to simulate super-resolution objects and optical images, which are then converted into simulated camera images by downsampling and adding noise based on the number of predicted incident photons as well as the camera noise characteristics. This tool communicates with Zemax through the .NET API to acquire any necessary data, which allows it to utilize Zemax's built-in tolerancing tools. These simulations can be performed at any stage in the design process, from initial concepts through manufacturing analyses, and calculations can include non-standard effects such as phase contrast and partial coherence.

We can now develop custom applications to predict quality metrics based on how the optics will be used. For example, we can simulate images of the underlying theoretical objects such as nanospheres, microwells, etc., and use them to predict necessary performance metrics such as CV and crosstalk. These simulations can even include non-optical elements such as stage performance and biological assay variations to help get a handle on predicted instrument performance in the field.

We have found this type of analysis to be incredibly useful when comparing a next-generation system to its predecessor design to ensure the new version maintains a client's existing product specifications as well as meeting any new or enhanced specifications. We can compare existing optical hardware to what our model of the new design is, which ultimately lets us predict results with the new design more accurately. A similar analysis workflow was recently applied to a tissue-scanning microscope to create a stochastic model of its performance. This allowed us to quantify the contributions of individual components such as the stage, lenses, illumination, etc. to the overall image fidelity and determine where improvements could be made and/or costs reduced to maintain sufficient quality for the manufactured instruments.

What does this mean to you?

Life Science and Diagnostic instruments continue to push the limits for imaging and optical detection. Key drivers are throughput such as with sequencing and digital pathology. Additional drivers are cost, accuracy, repeatability, reliability, manufacturabilty, etc., etc.. ***What this means to you*** is not only does Lathrop have the staff, skills, and experience with these technologies and systems, but we also have the staff, skills, and experience with "modeling these systems and predicting the impact of variables" such that by the time the design is being prototyped and tested, there is very little iteration required. ***What this means to you*** is less time in development, more predictability, and lower cost in development and in manufacturing. ***What this means to you*** is better understanding of your design means faster response and resolution to problems in the field. ***What this means to you is a competitive edge in the market.***

Example: a supplier goes out of business, a component is unavailable, component costs escalate; the ability to predict the impact of an alternate component will reduce risks, time, and cost.

OPTICAL ENGINEERING CAPABILITIES

- Theoretical design and modeling
- Rapid breadboard feasibility analysis and testing
- Custom imaging and non-imaging detection systems
- Custom illumination systems
- Custom light pipe design
- Calibration and characterization target design
- Fluorescence and polarization-based epi-illumination systems
- On-the-fly data acquisition and analysis
- High volume, low cost systems
- Low volume, custom engineered solutions
- Single and multi-mode fiber optic systems
- F-Theta scanning systems
- High speed, high magnification scanning imaging systems

Flow Cytometry

Label Free Reader Module

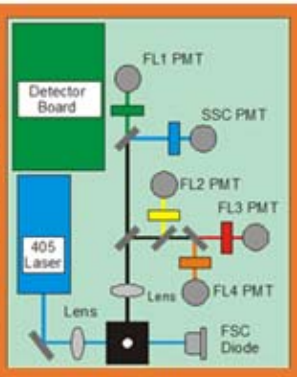

Low Cost Flow Cytometry

Lathrop Celebrates more than 30 years of success.

Lathrop has been providing top notch design and engineering services since its founding in 1982.

Upcoming Events

- ASHG 2016

  Vancouver | Booth 731, 733

- AMP 2016

  Charlotte, NC | Booth 1720

Lathrop exhibits and attends many tradeshows throughout the year across the country. Come visit us at our booth. If you cannot make it to the tradeshow, call us and we can schedule a visit while we are in your area.

Get Connected! Contact us today! 408-260-2111

lathrop™
a paramit company

www.lathropengineering.com twitter @LathropTLH bobl@lathropengineering.com 408.260.2111